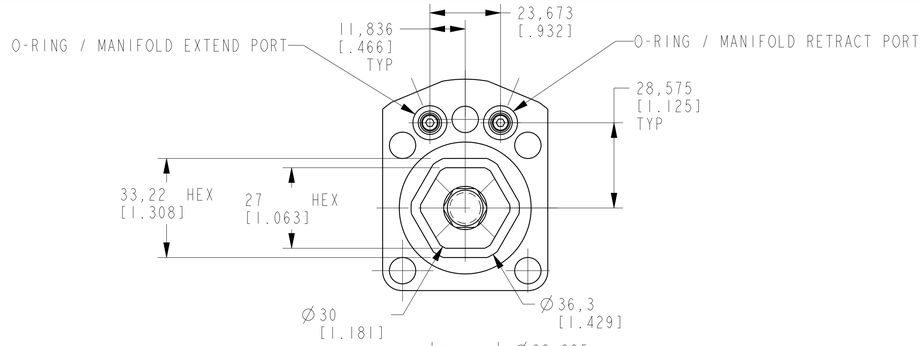

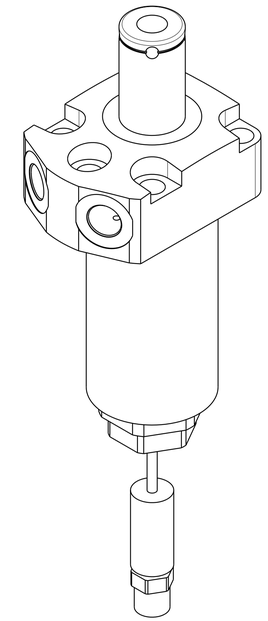

ILCM41561124US REV A ECN 5678

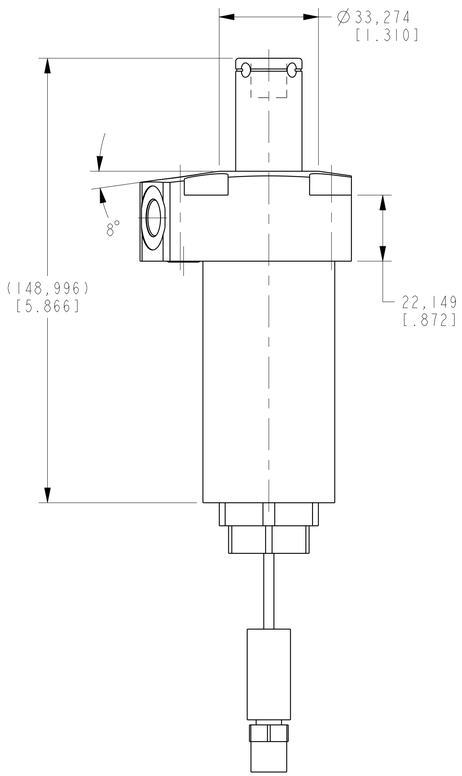

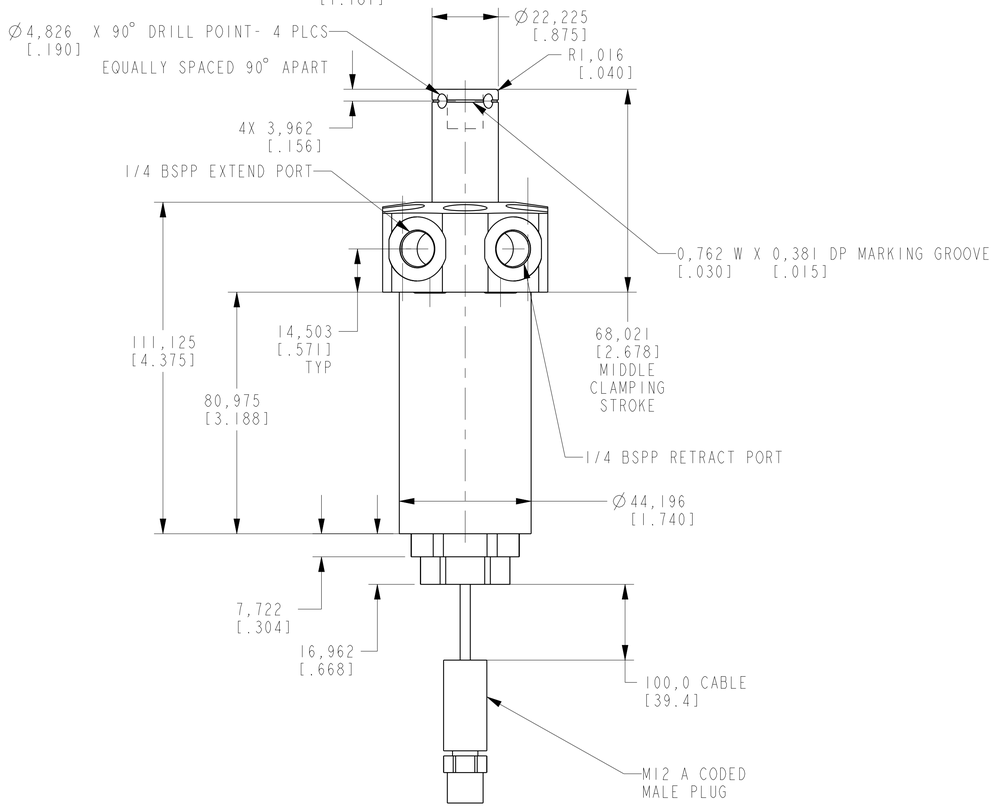

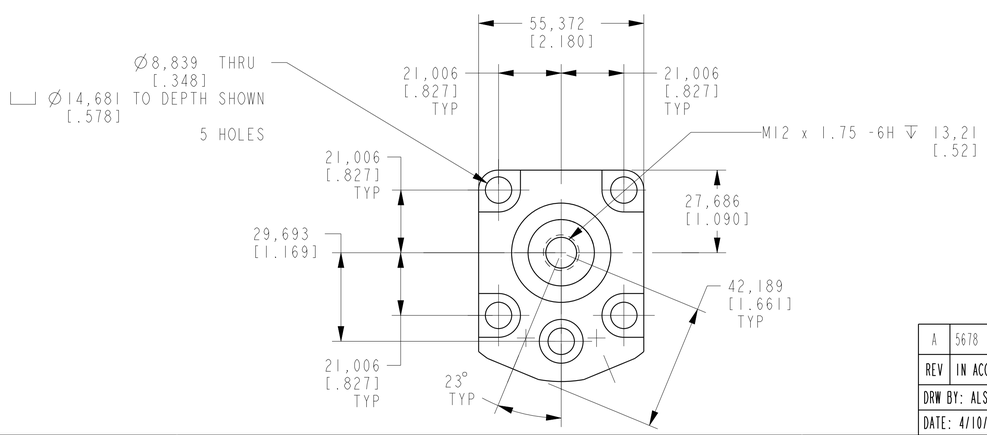

CAD CONTROL DRAWING

VEKTEK®

VEKTEK, INC.
1334 E. SIXTH AVE. P.O. BOX 625
EMPORIA, KS. 66801 U.S.A.

REV	IN ACCORDANCE WITH ECN	EFFECTIVE DATE	REVISED BY	DATE	REFERENCE MODEL	REF REV	
A	5678	RELEASE	ALS	4/7/25	41561124US	A	SC, TF, 11.6 KN, DA, LH, US

DRW BY: ALS
DATE: 4/10/25

DRAWING STATUS: **Released**
PRODUCTION APPROVED FOR RELEASED STATUS ONLY

TOLERANCES DO NOT APPLY
DIMENSIONS ARE NOMINAL

UNITS mm [inch]

SIZE D | ILCM41561124US | REV A

SHEET 1 OF 1

FORM FEG036, Rev. C

@Copyright 1986-2026 by Vektek LLC******* *****