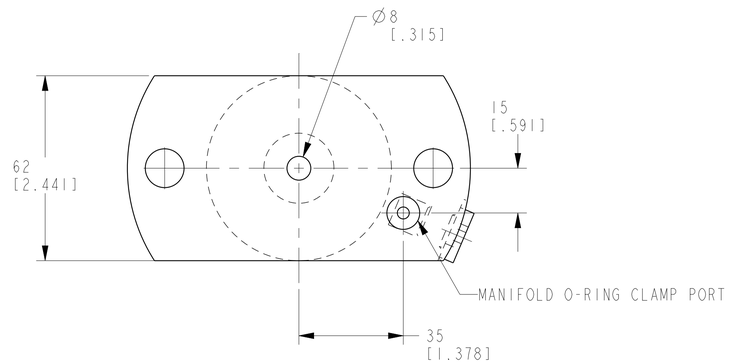


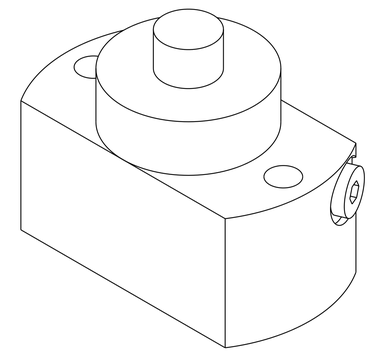

ILCM41571124 REV B ECN 5066

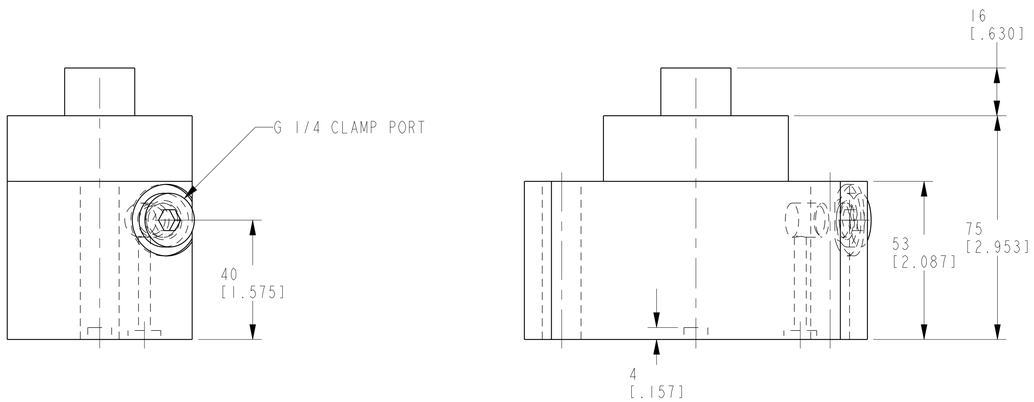


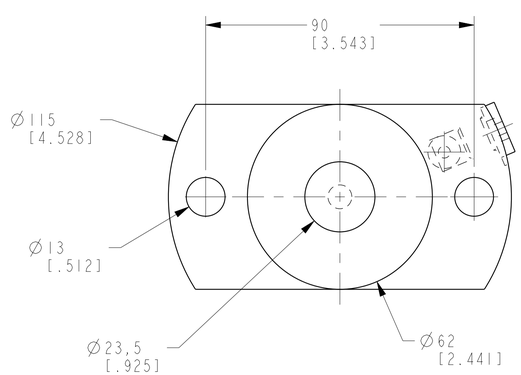


| | | | | | | | |
|---|---|---|---|---|---|---|---|
| B | 5066 | RELEASE | RLK | 4/5/23 | 41571124 | A | CLAMP,PL DN,SA,31 KN,24MM,CNCTRC |
| REV | IN ACCORDANCE WITH ECN | EFFECTIVE DATE | REVISED BY | DATE | REFERENCE MODEL | REF REV | ''''''' |
| DRW BY: K. ROEMER | DRAWING STATUS: Released | | | | TOLERANCES DO NOT APPLY | UNITS | SIZE |
| DATE: 05-10-06 | PRODUCTION APPROVED FOR RELEASED STATUS ONLY | | | | DIMENSIONS ARE NOMINAL | mm [inch] | D |

SIZE: D — ILCM41571124 — REV: B

CAD CONTROL DRAWING

VEKTEK®
VEKTEK, INC.
1334 E. SIXTH AVE. P.O. BOX 625
EMPORIA, KS. 66801 U.S.A.

SHEET 1 OF 1

FORM FEG036, Rev. C

@Copyright 1986-2026 by Vektek LLC******* *****