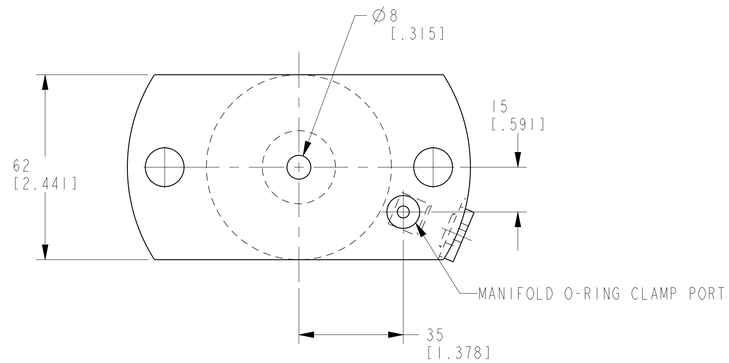

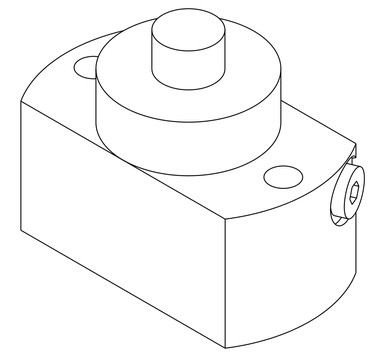

ILCM41571125 REV B ECN 5066

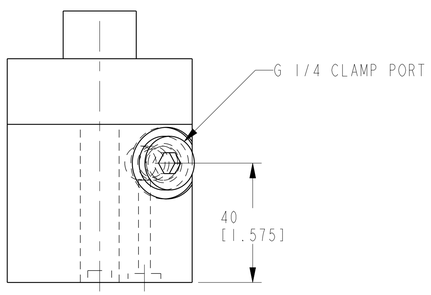

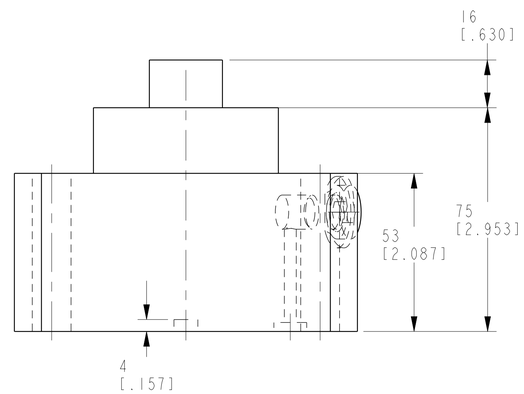

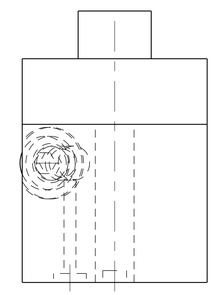

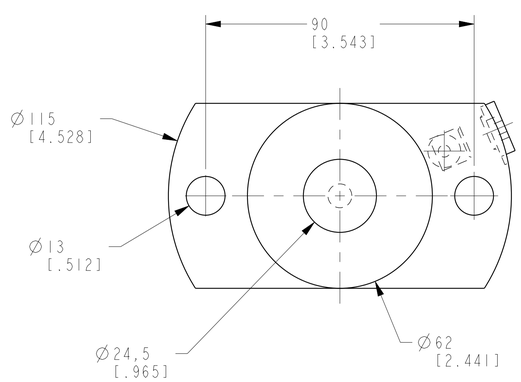

B	5066	RELEASE	RLK	4/5/23	41571125	A	CLAMP,PL DN,SA,31 KN,25MM,CNCTRC
REV	IN ACCORDANCE WITH ECN	EFFECTIVE DATE	REVISED BY	DATE	REFERENCE MODEL	REF REV	^^^^^^
DRW BY: K. ROEMER DATE: 05-10-06	DRAWING STATUS: Released PRODUCTION APPROVED FOR RELEASED STATUS ONLY				TOLERANCES DO NOT APPLY DIMENSIONS ARE NOMINAL	UNITS mm [inch]	SIZE D — ILCM41571125 — REV B

CAD CONTROL DRAWING

VEKTEK®
VEKTEK, INC.
1334 E. SIXTH AVE. P.O. BOX 625
EMPORIA, KS. 66801 U.S.A.

SHEET 1 OF 1

@Copyright 1986-2026 by Vektek LLC******* ***** ********** FORM FEG036, Rev. C