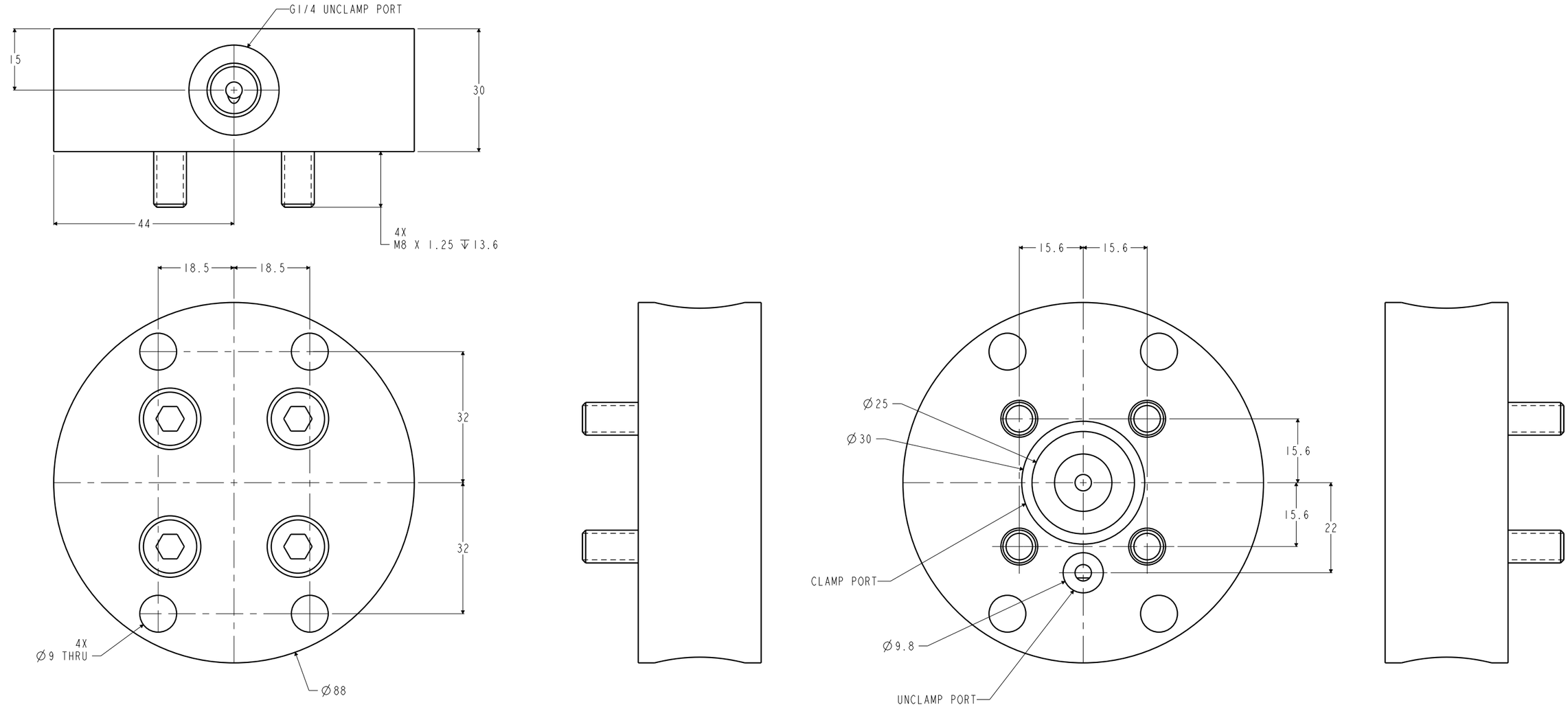

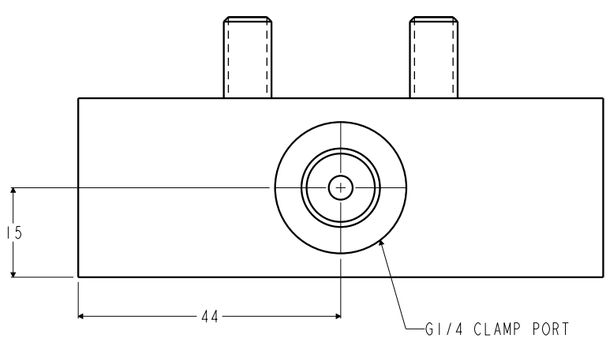

CAD CONTROL DRAWING

VEKTEK®
VEKTEK, INC.
1334 E. SIXTH AVE. P.O. BOX 625
EMPORIA, KS. 66801 U.S.A.

A	4112	RELEASE	JDW	02/21/20	41582004	A	PLATE,MOUNT,G1/4 PORTS,M8 SHCS
REV	IN ACCORDANCE WITH ECN	EFFECTIVE DATE	REVISED BY	DATE	REFERENCE MODEL	REF REV	
DRW BY: JDW	DRAWING STATUS: **Released**				TOLERENCES DO NOT APPLY	UNITS	SIZE
DATE: 02/21/20	PRODUCTION APPROVED FOR RELEASED STATUS ONLY				DIMENSIONS ARE NOMINAL	mm [inch]	B

ILCM41582004 REV A

SHEET 1 OF 1

FORM FEG036, Rev. C

@Copyright 1986-2026 by Vektek LLC******* *****

****