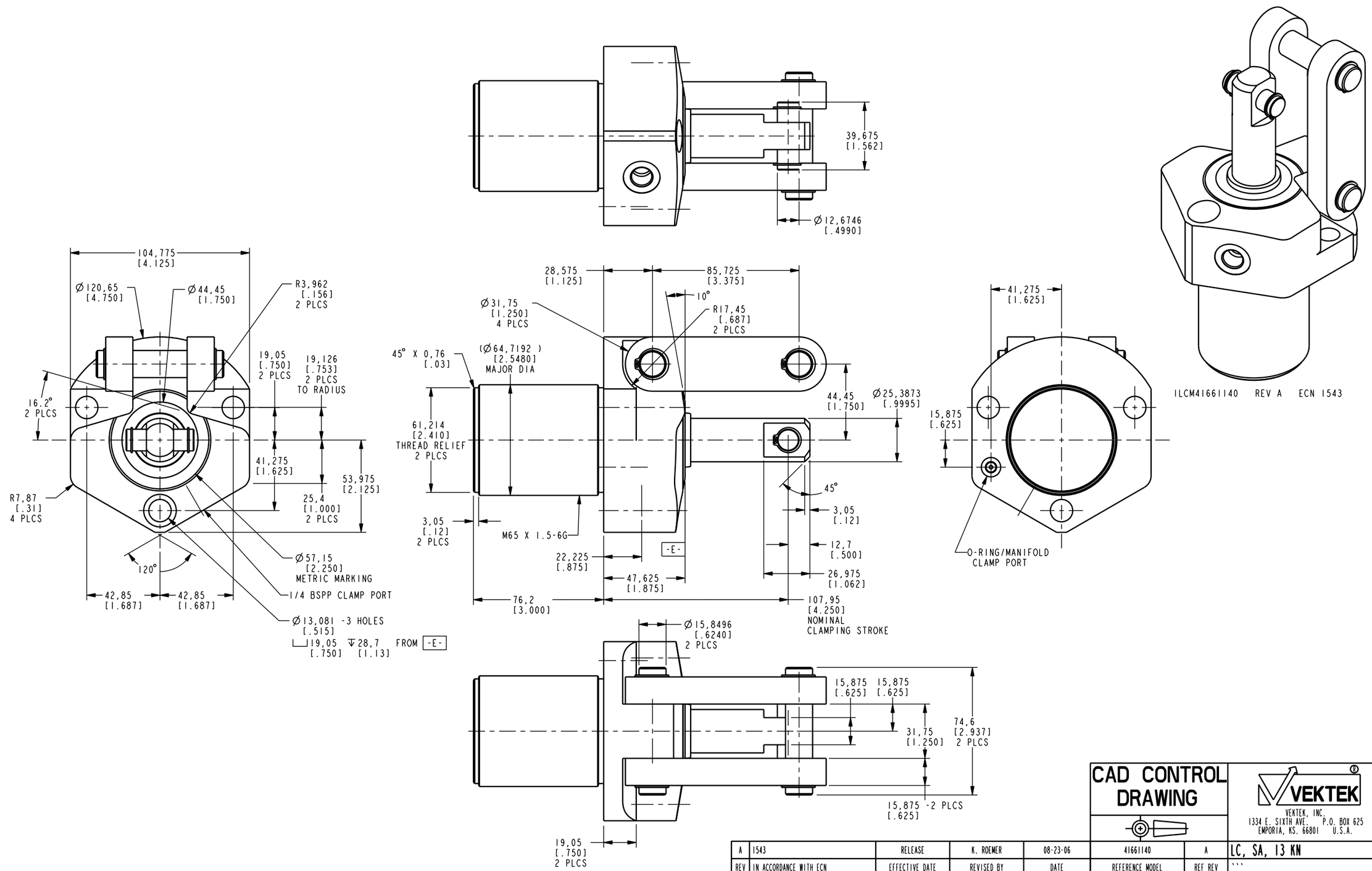

A	1543	RELEASE	K. ROEMER	08-23-06	41661140	A	LC, SA, 13 KN
REV	IN ACCORDANCE WITH ECN	EFFECTIVE DATE	REVISED BY	DATE	REFERENCE MODEL	REF REV	```
DRW BY: K. ROEMER	DRAWING STATUS: **Released**				TOLERANCES DO NOT APPLY	UNITS	SIZE
DATE: 08-23-06	PRODUCTION APPROVED FOR RELEASED STATUS ONLY				DIMENSIONS ARE NOMINAL	mm [inch]	D

CAD CONTROL DRAWING

VEKTEK
VEKTEK, INC.
1334 E. SIXTH AVE. P.O. BOX 625
EMPORIA, KS. 66801 U.S.A.

ILCM41661140 REV A

SHEET 1 OF 1

FORM FEG036, Rev. B

@Copyright 1986-2026 by Vektek LLC******* *****

****