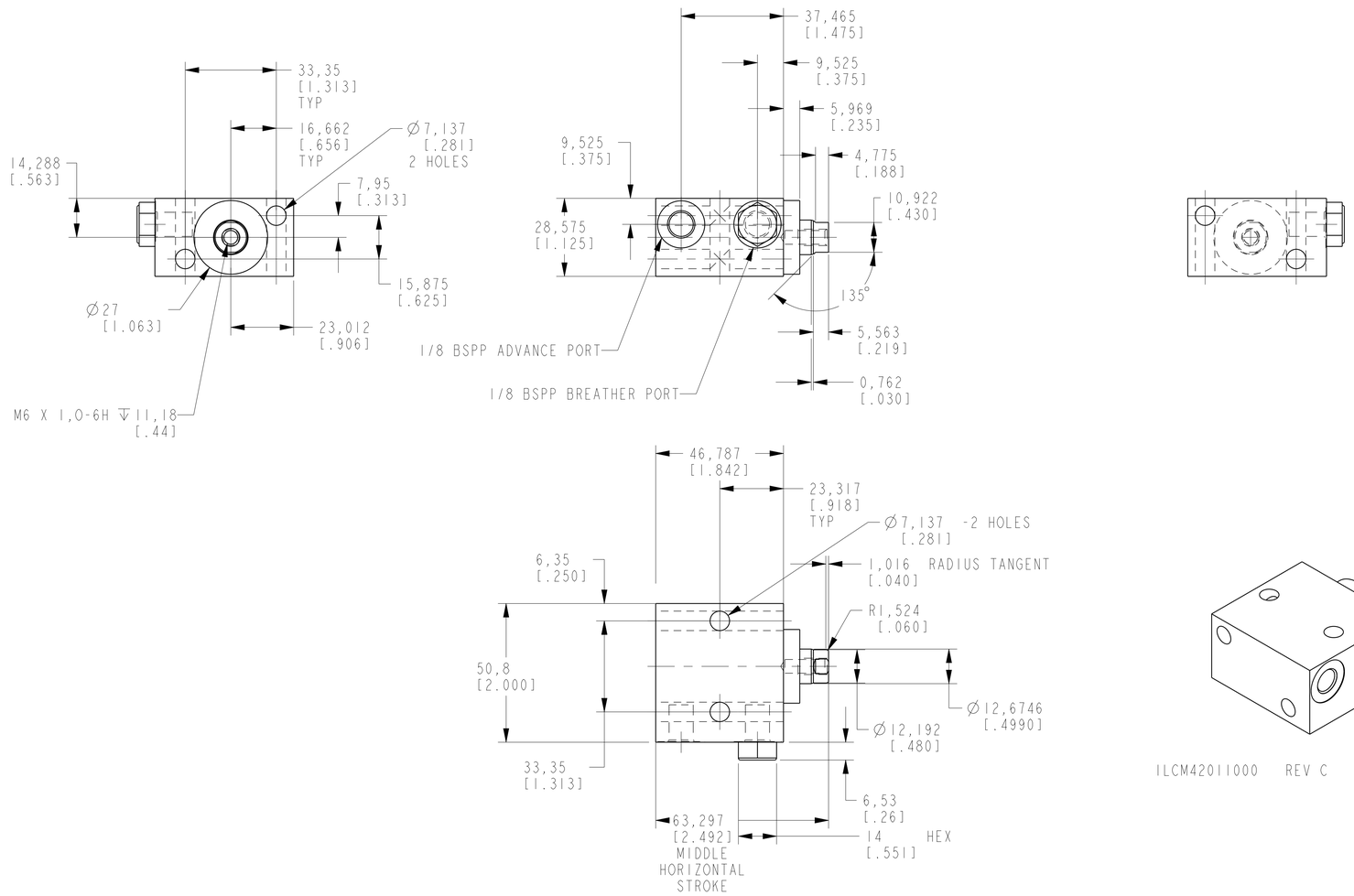

CAD CONTROL DRAWING

VEKTEK

VEKTEK, INC.
1334 E. SIXTH AVE. P.O. BOX 625
EMPORIA, KS. 66801 U.S.A.

C	3531	RELEASE	NPETERS	07/17/18	42011000	K	CYL,BB,10.1 KN,6.5 STRK,SA
REV	IN ACCORDANCE WITH ECN	EFFECTIVE DATE	REVISED BY	DATE	REFERENCE MODEL	REF REV	
DRW BY: K. ROEMER	DRAWING STATUS: **Released**				TOLERANCES DO NOT APPLY	UNITS	SIZE
DATE: 05-24-06	PRODUCTION APPROVED FOR RELEASED STATUS ONLY				DIMENSIONS ARE NOMINAL	mm [inch]	D

ILCM42011000 REV C

SHEET 1 OF 1

@Copyright 1986-2026 by Vektek LLC******* *****

FORM FEG036, Rev. C