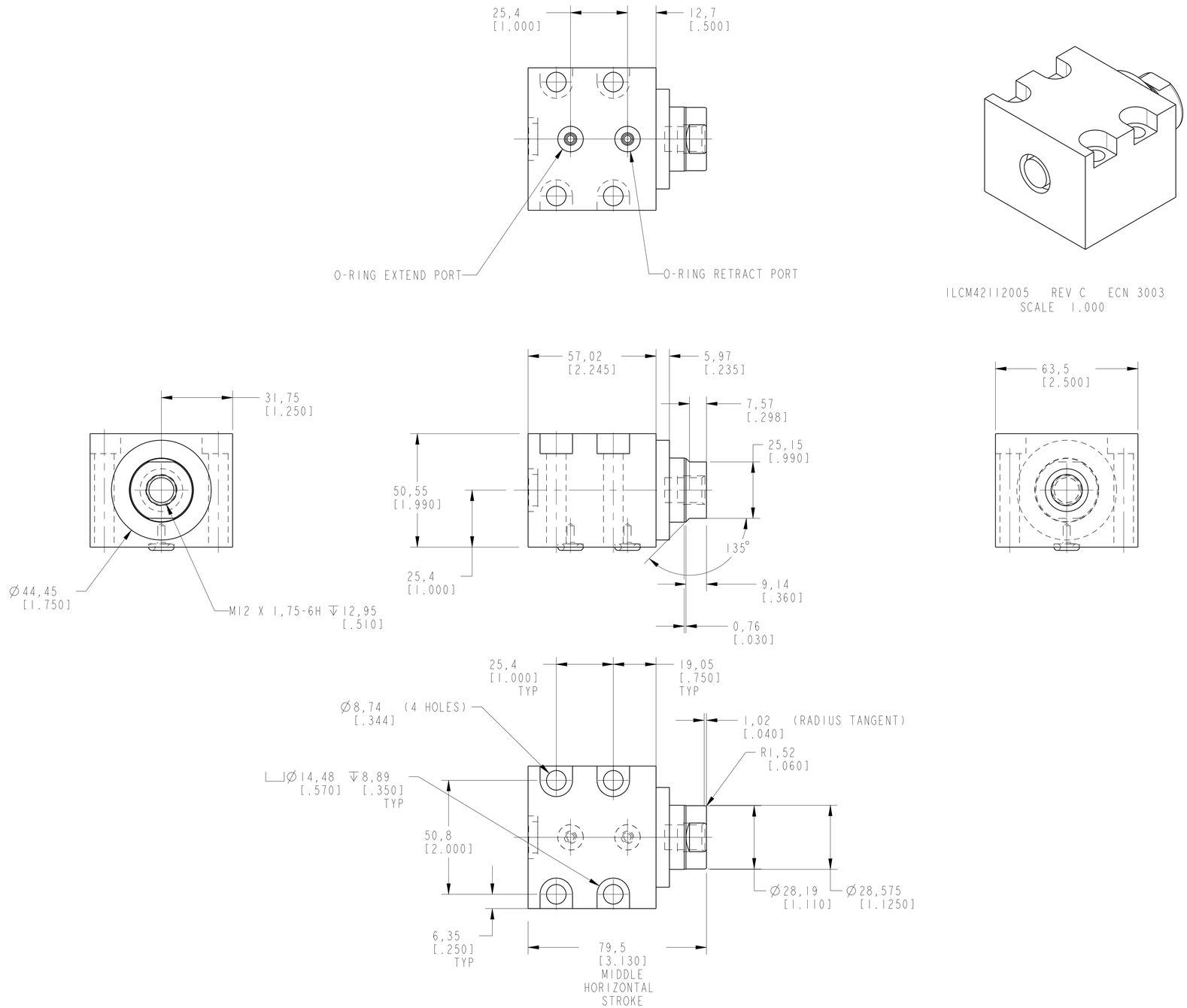

CAD CONTROL DRAWING

VEKTEK®

VEKTEK, INC.
1334 E. SIXTH AVE. P.O. BOX 625
EMPORIA, KS. 66801 U.S.A.

REV	IN ACCORDANCE WITH ECN	EFFECTIVE DATE	REVISED BY	DATE	REFERENCE MODEL	REF REV	
C	3003	RELEASE	MAJ	4/8/16	42112005	A	CYL,BB,MM,39,9KN,12,5STRK,DA

DRW BY: G. ROMINE	DRAWING STATUS: **Released**	TOLERANCES DO NOT APPLY	UNITS	SIZE
DATE: 02/29/08	PRODUCTION APPROVED FOR RELEASED STATUS ONLY	DIMENSIONS ARE NOMINAL	mm [inch]	D

ILCM42112005 — REV C

SHEET 1 OF 1

FORM FEG036, Rev. C

@Copyright 1986-2026 by Vektek LLC******* *****