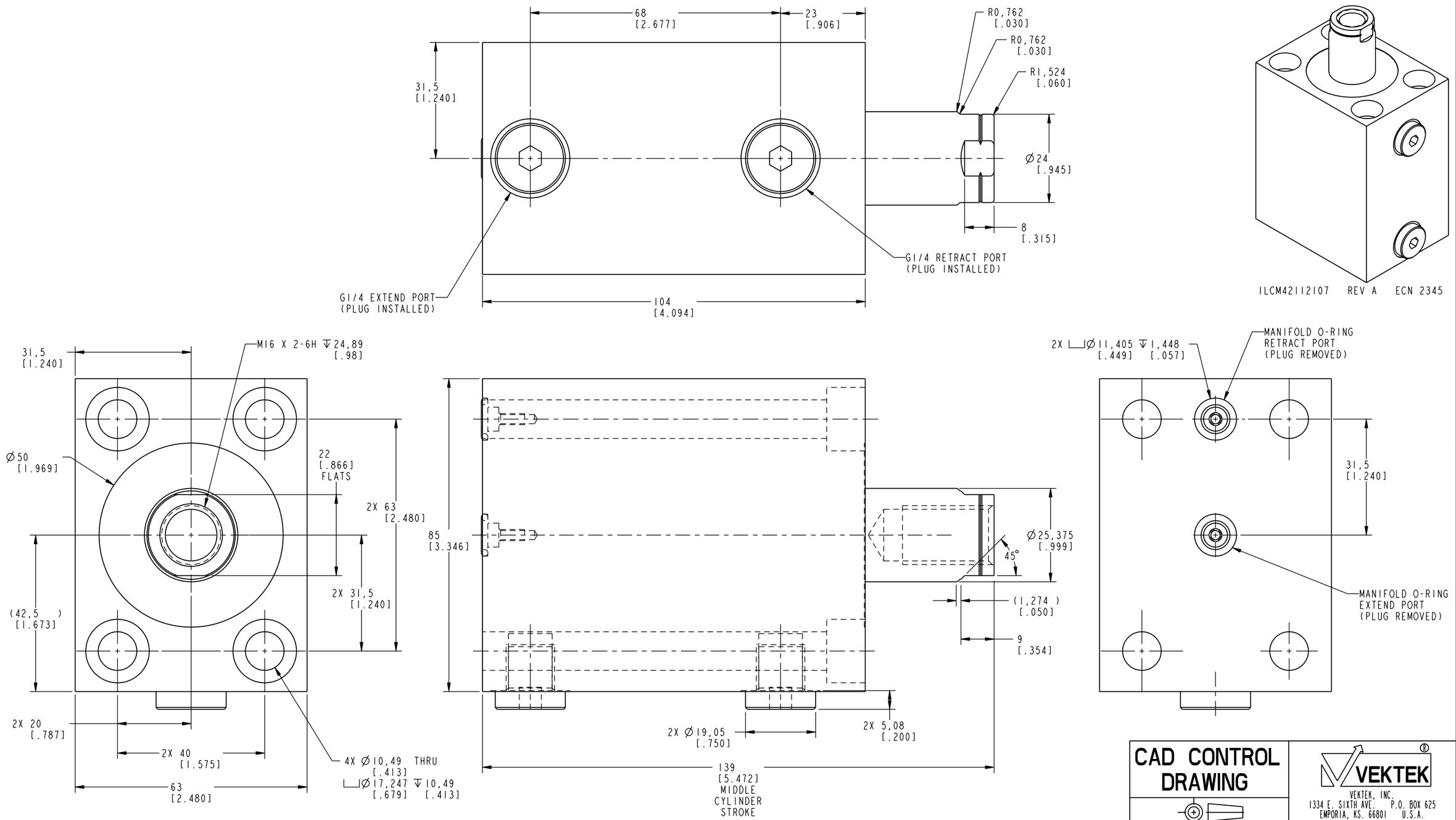

@Copyright 1986-2026 by Vektek LLC******* *****

****