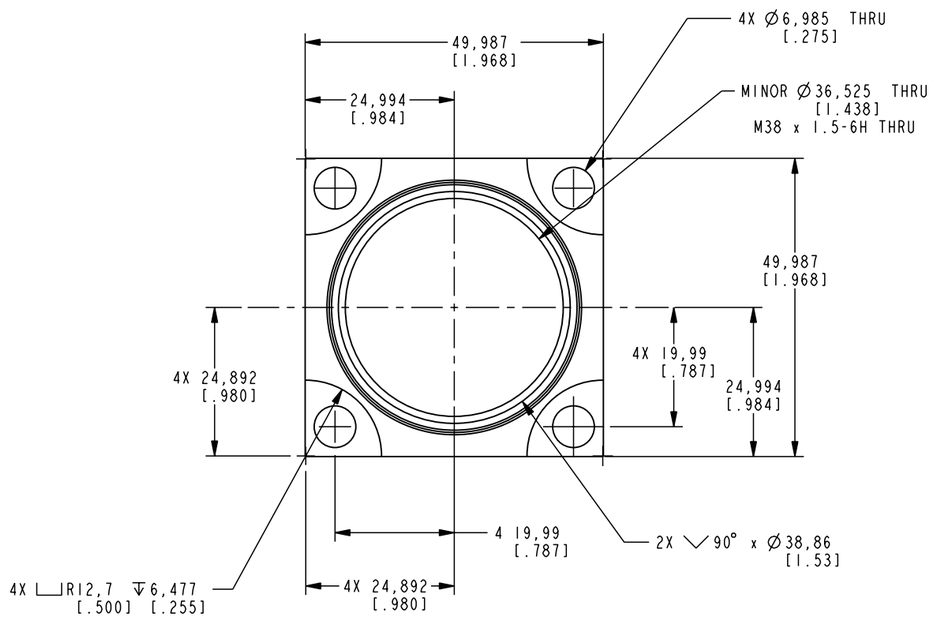

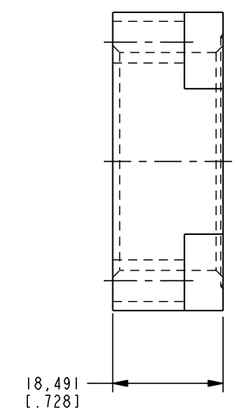

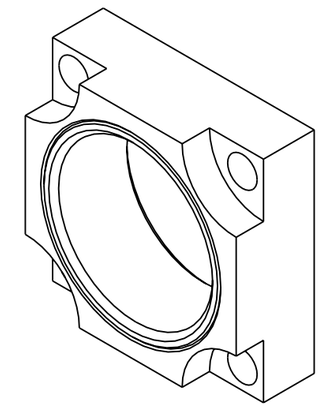

ILCM44013800 REV A ECN1781

CAD CONTROL DRAWING

VEKTEK®
VEKTEK, INC.
1334 E. SIXTH AVE. P.O. BOX 625
EMPORIA, KS. 66801 U.S.A.

A	1781	RELEASE	K. ROEMER	11/12/07	44013800	F	FLANGE, MOUNTING, M38
REV	IN ACCORDANCE WITH ECN	EFFECTIVE DATE	REVISED BY	DATE	REFERENCE MODEL	REF REV	
DRW BY: K. ROEMER	DRAWING STATUS: **Released**				TOLERENCES DO NOT APPLY	UNITS	SIZE B / ILCM44013800 / REV A
DATE: 11/12/07	PRODUCTION APPROVED FOR RELEASED STATUS ONLY				DIMENSIONS ARE NOMINAL	mm [inch]	

SHEET 1 OF 1

FORM FEG036, Rev. A

@Copyright 1986-2026 by Vektek LLC******* *****

****