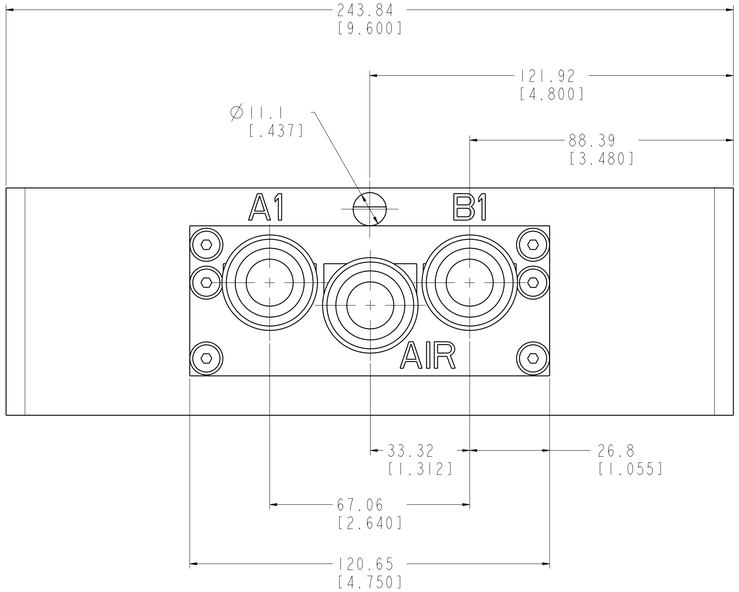

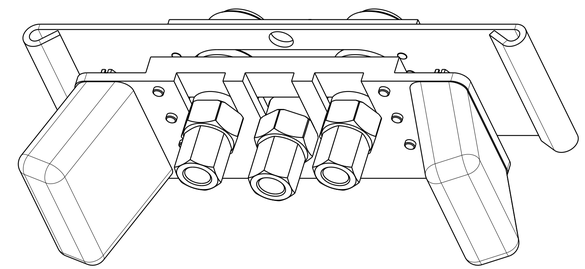

SCALE 0.750

ILCM45600701 REV A ECN3570

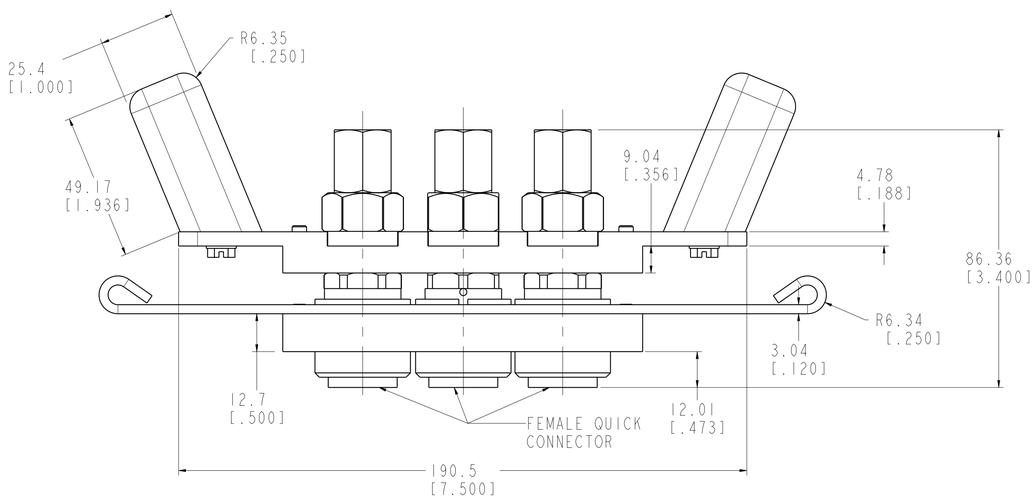

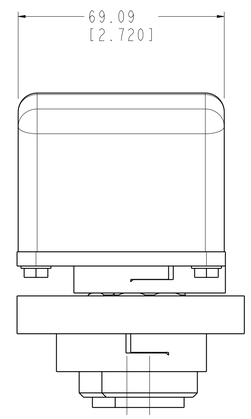

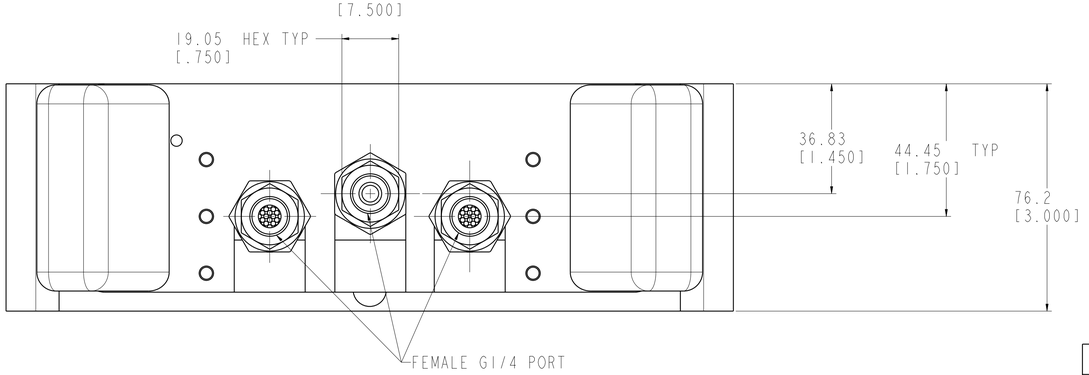

CAD CONTROL DRAWING

VEKTEK®
VEKTEK, INC.
1334 E. SIXTH AVE. P.O. BOX 625
EMPORIA, KS. 66801 U.S.A.

A	3570	RELEASE	DLG	8-29-18	45600701	A	ASSY, HANDLE, PD, 2H, DUAL,PNEU, METRIC
REV	IN ACCORDANCE WITH ECN	EFFECTIVE DATE	REVISED BY	DATE	REFERENCE MODEL	REF REV	******
DRW BY: DLG	DRAWING STATUS: **Released**				TOLERANCES DO NOT APPLY	UNITS	SIZE
DATE: 8/6/18	PRODUCTION APPROVED FOR RELEASED STATUS ONLY				DIMENSIONS ARE NOMINAL	mm [inch]	D

ILCM45600701 REV A

SHEET 1 OF 1

@Copyright 1986-2026 by Vektek LLC******* *****

FORM FEG036, Rev. C