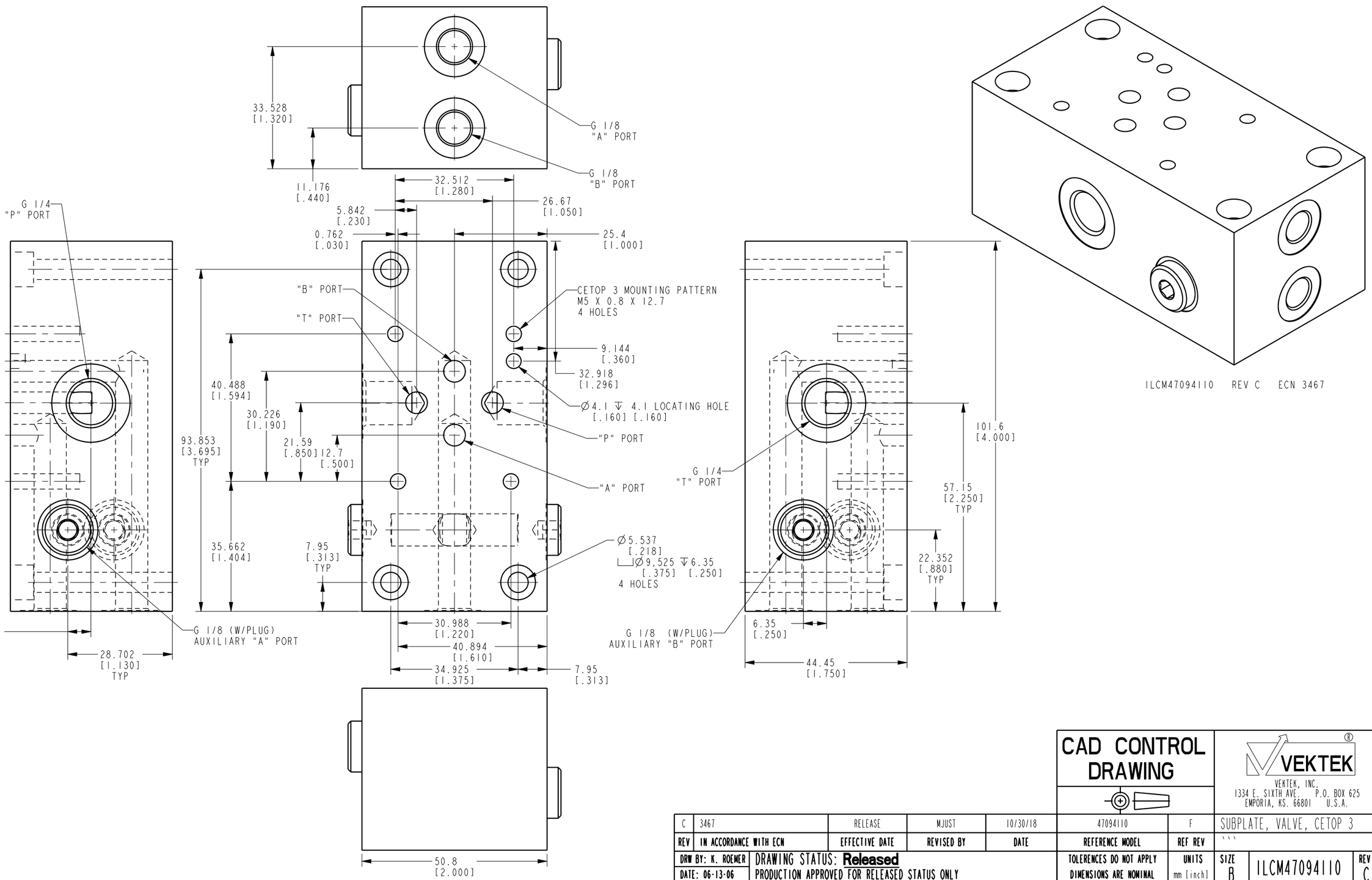

C	3467	RELEASE	MJUST	10/30/18	47094110	F	SUBPLATE, VALVE, CETOP 3
REV	IN ACCORDANCE WITH ECN	EFFECTIVE DATE	REVISED BY	DATE	REFERENCE MODEL	REF REV	```
DRW BY: K. ROEMER	DRAWING STATUS: **Released**				TOLERENCES DO NOT APPLY	UNITS	SIZE B — ILCM47094110 — REV C
DATE: 06-13-06	PRODUCTION APPROVED FOR RELEASED STATUS ONLY				DIMENSIONS ARE NOMINAL	mm [inch]	

CAD CONTROL DRAWING

VEKTEK®
VEKTEK, INC.
1334 E. SIXTH AVE. P.O. BOX 625
EMPORIA, KS. 66801 U.S.A.

SHEET 1 OF 1

FORM FEG036, Rev. C

@Copyright 1986-2026 by Vektek LLC******* ***** ************