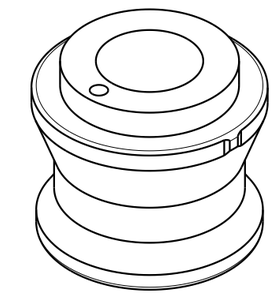

ILCM570394 REV B ECN 5590

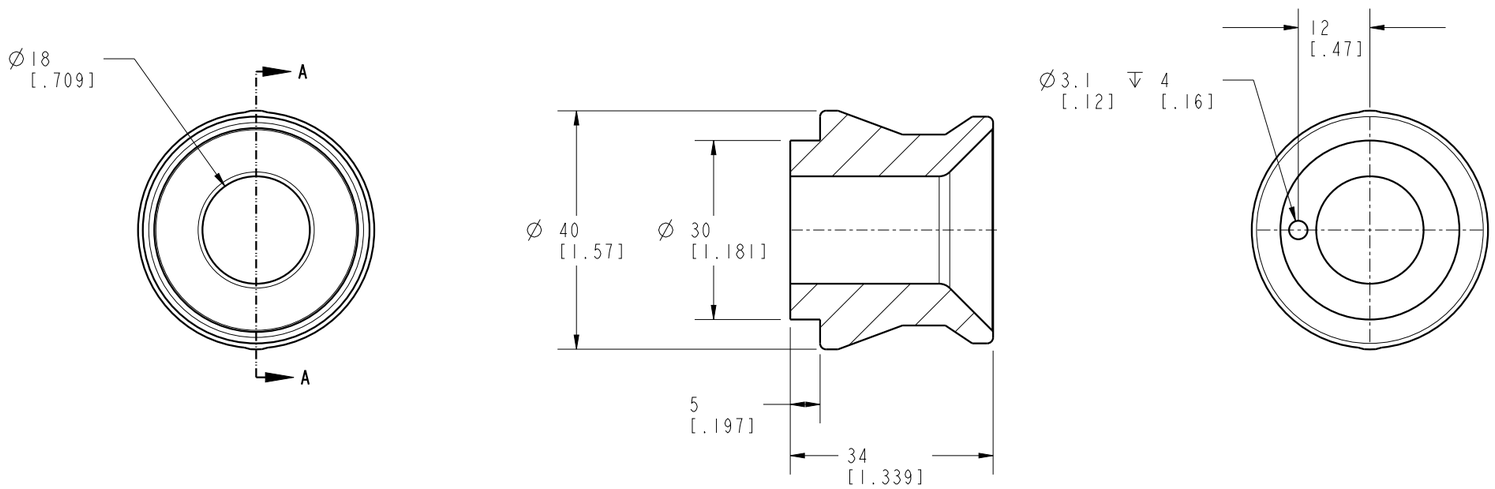


SECTION A-A

Weight: 170g (.37 lb)

| | | | | | | | |
|---|---|---|---|---|---|---|---|
| B | 5590 | RELEASE | NPETERS | 11/25/24 | 570394 | A | TIMING PULL-STUD, SIZE 40, M18 |
| REV | IN ACCORDANCE WITH ECN | EFFECTIVE DATE | REVISED BY | DATE | REFERENCE MODEL | REF REV | `` `` `` |
| DRW BY: RLK | DRAWING STATUS: Released | | | | TOLERENCES DO NOT APPLY | UNITS | SIZE B / ILCM570394 / REV B |
| DATE: 2/19/24 | PRODUCTION APPROVED FOR RELEASED STATUS ONLY | | | | DIMENSIONS ARE NOMINAL | mm [inch] | |

CAD CONTROL DRAWING

VEKTEK®
VEKTEK, INC.
1334 E. SIXTH AVE. P.O. BOX 625
EMPORIA, KS. 66801 U.S.A.

SHEET 1 OF 1

FORM FEG036, Rev. C

@Copyright 1986-2026 by Vektek LLC******* ***** **********