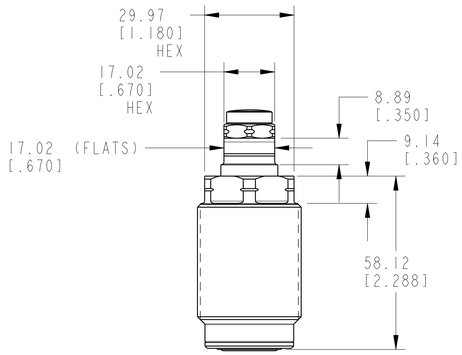


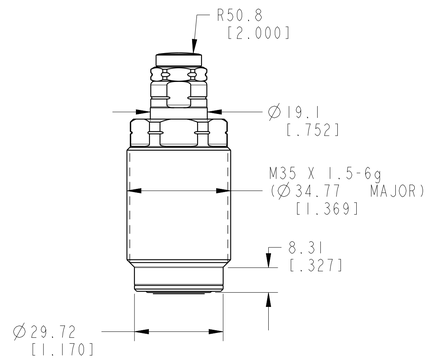


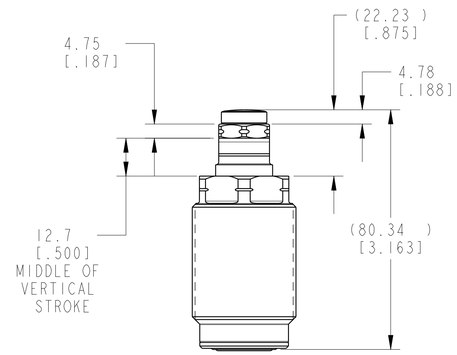


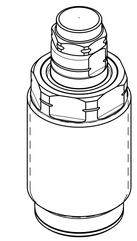

ILCMV41070810PS REV C ECN4096

SCALE 1.000

SEE IS5003 FOR PART PRESENT SENSOR SETUP

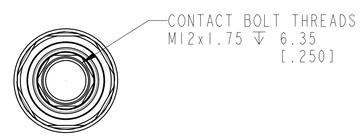


# CAD CONTROL DRAWING

VEKTEK

VEKTEK, INC.
1334 E. SIXTH AVE. P.O. BOX 625
EMPORIA, KS. 66801 U.S.A.

| | | | | | | | |
|---|---|---|---|---|---|---|---|
| C | 4096 | RELEASE | MJUST | 3/19/20 | 41070810PS | C | WS, FA, CM, HC, 17.8kN, PPS |
| REV | IN ACCORDANCE WITH ECN | EFFECTIVE DATE | REVISED BY | DATE | REFERENCE MODEL | REF REV | |

| | | | | | |
|---|---|---|---|---|---|
| DRW BY: ALS | DRAWING STATUS: **Released** | TOLERANCES DO NOT APPLY | UNITS | SIZE | REV |
| DATE: 05/31/19 | PRODUCTION APPROVED FOR RELEASED STATUS ONLY | DIMENSIONS ARE NOMINAL | mm [inch] | D | ILCMV41070810PS C |

SHEET 1 OF 1

FORM FEG036, Rev. C

@Copyright 1986-2026 by Vektek LLC******* *****