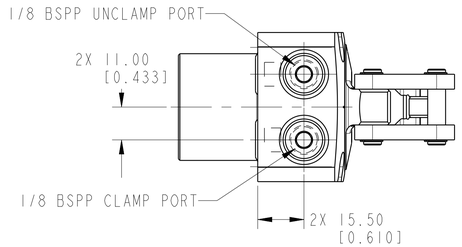

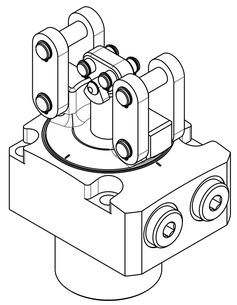

ILCMV41621520 REV A ECN 4724

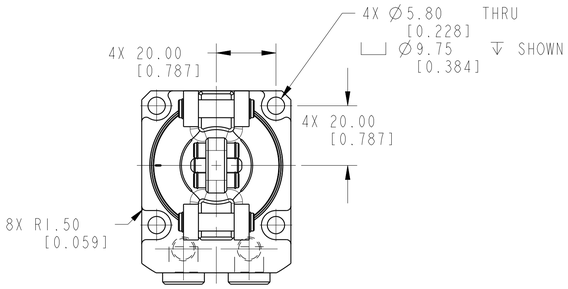

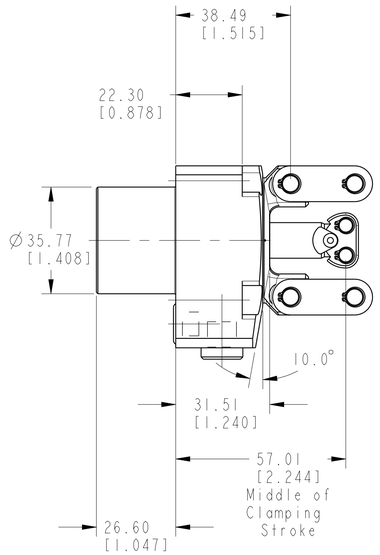

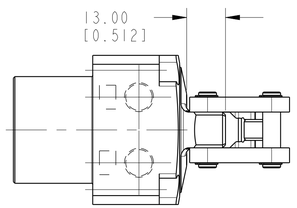

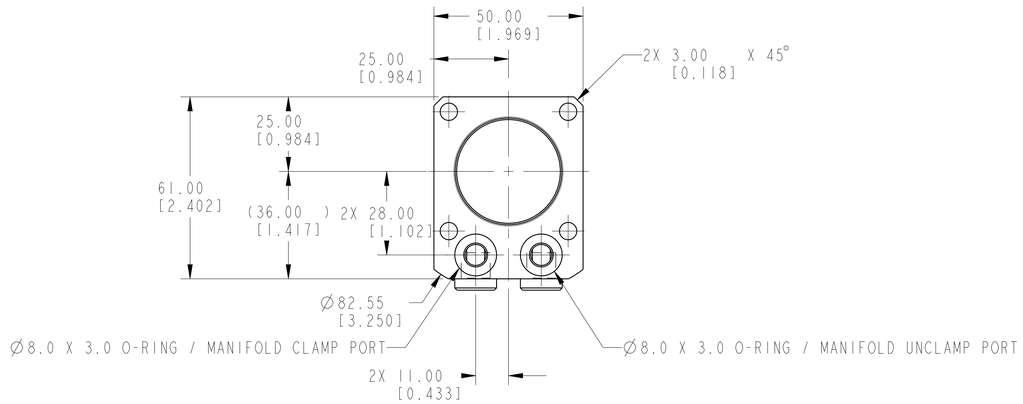

CAD CONTROL DRAWING

VEKTEK®

VEKTEK, INC.
1334 E. SIXTH AVE. P.O. BOX 625
EMPORIA, KS. 66801 U.S.A.

A	4724	RELEASE	BDC	7/20/22	41621500	A	LC, TL360, DA, 4.36kN
REV	IN ACCORDANCE WITH ECN	EFFECTIVE DATE	REVISED BY	DATE	REFERENCE MODEL	REF REV	
DRW BY: BCD	DRAWING STATUS: **Released**				TOLERANCES DO NOT APPLY	UNITS	SIZE / REV
DATE: 8-25-16	PRODUCTION APPROVED FOR RELEASED STATUS ONLY				DIMENSIONS ARE NOMINAL	mm [inch]	D / ILCMV41621520 / A

SHEET 1 OF 1

@Copyright 1986-2026 by Vektek LLC******* *****

****

FORM FEG036, Rev. C