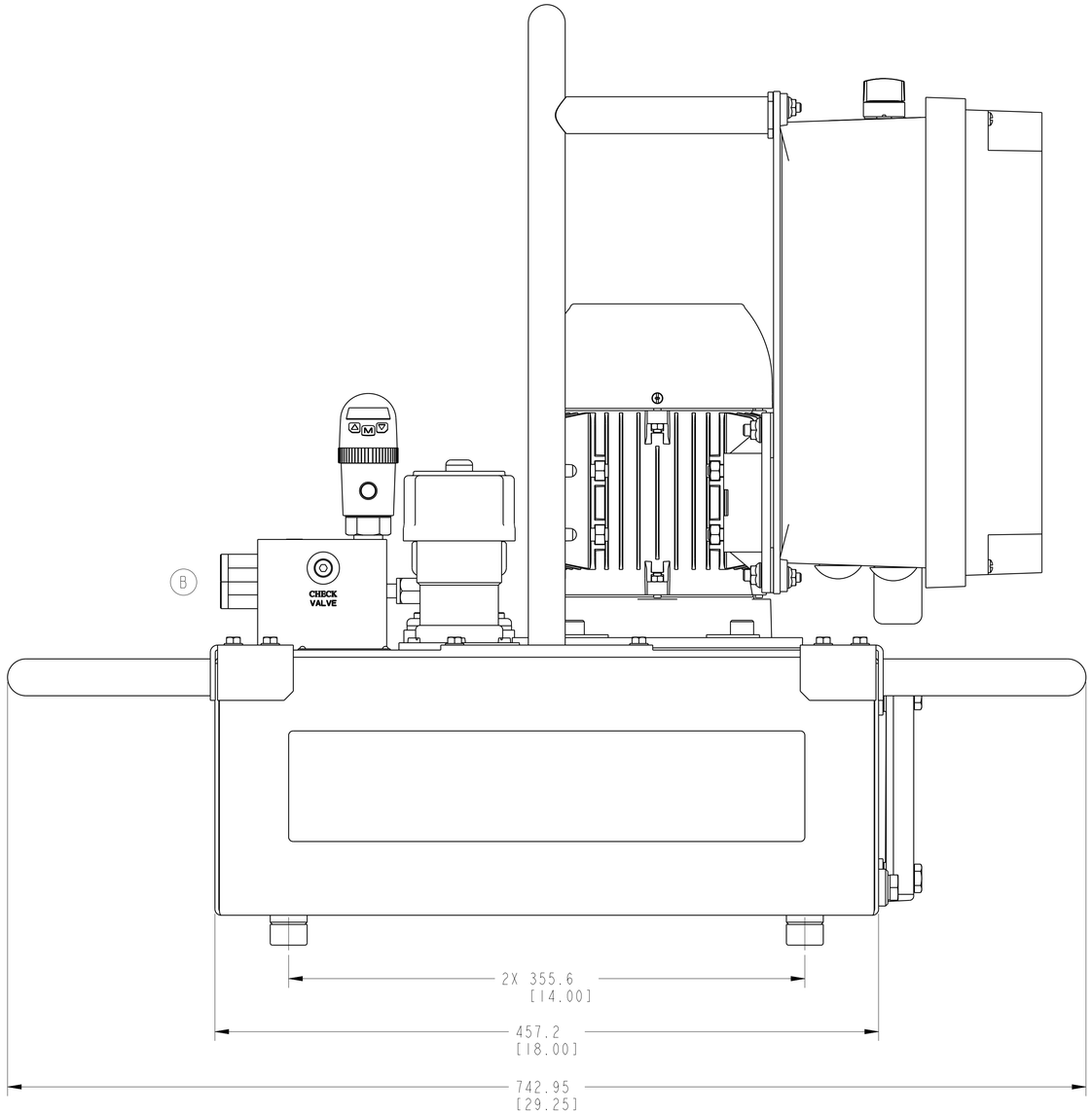

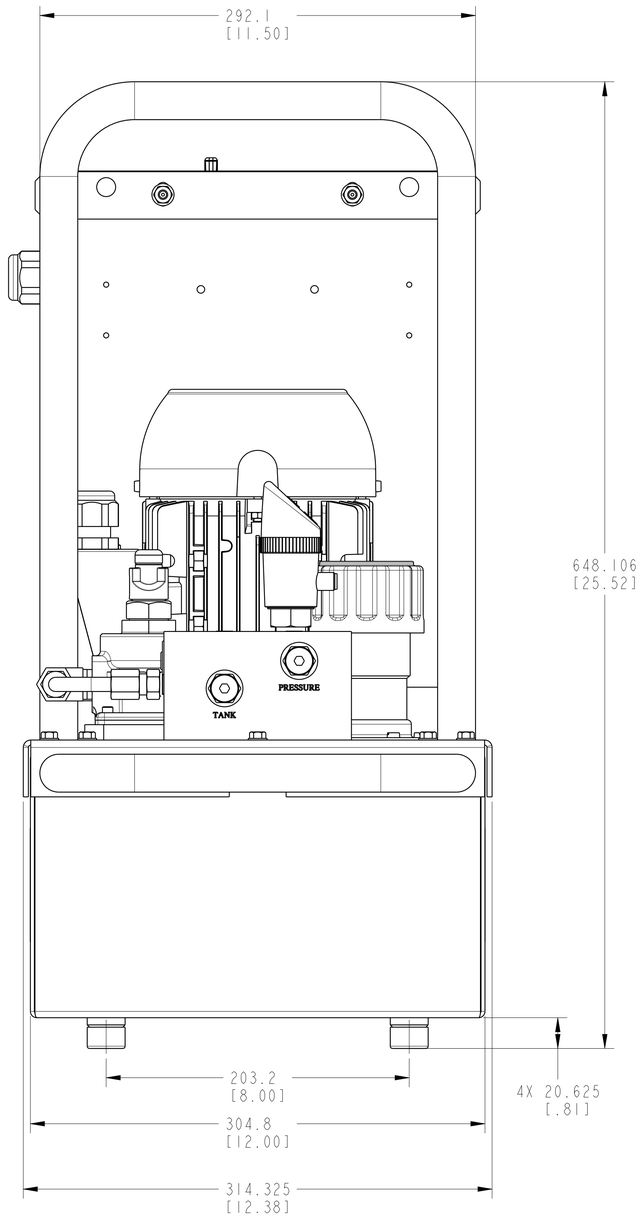

SCALE 0.500 ILCMV45956500 REV B ECN 3310

CAD CONTROL DRAWING

VEKTEK®

VEKTEK, INC.
1334 E. SIXTH AVE. P.O. BOX 625
EMPORIA, KS. 66801 U.S.A.

B	3310	RELEASE	KR	10/10/17	45956500	A	AY,AWP,50,1HP,1P,200-240V,5G,NP,EXP
REV	IN ACCORDANCE WITH ECN	EFFECTIVE DATE	REVISED BY	DATE	REFERENCE MODEL	REF REV	'''''''
DRW BY: KR	DRAWING STATUS: **Released**				TOLERANCES DO NOT APPLY	UNITS	SIZE
DATE: 12/06/16	PRODUCTION APPROVED FOR RELEASED STATUS ONLY				DIMENSIONS ARE NOMINAL	mm [inch]	D

ILCMV45956500 REV B

SHEET 1 OF 1

@Copyright 1986-2026 by Vektek LLC******* *****

****

FORM FEG036, Rev. C