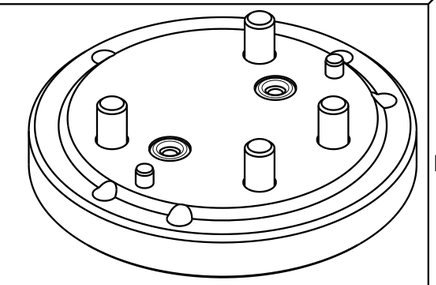

ILCMVAP61026002 REV A ECN 5752

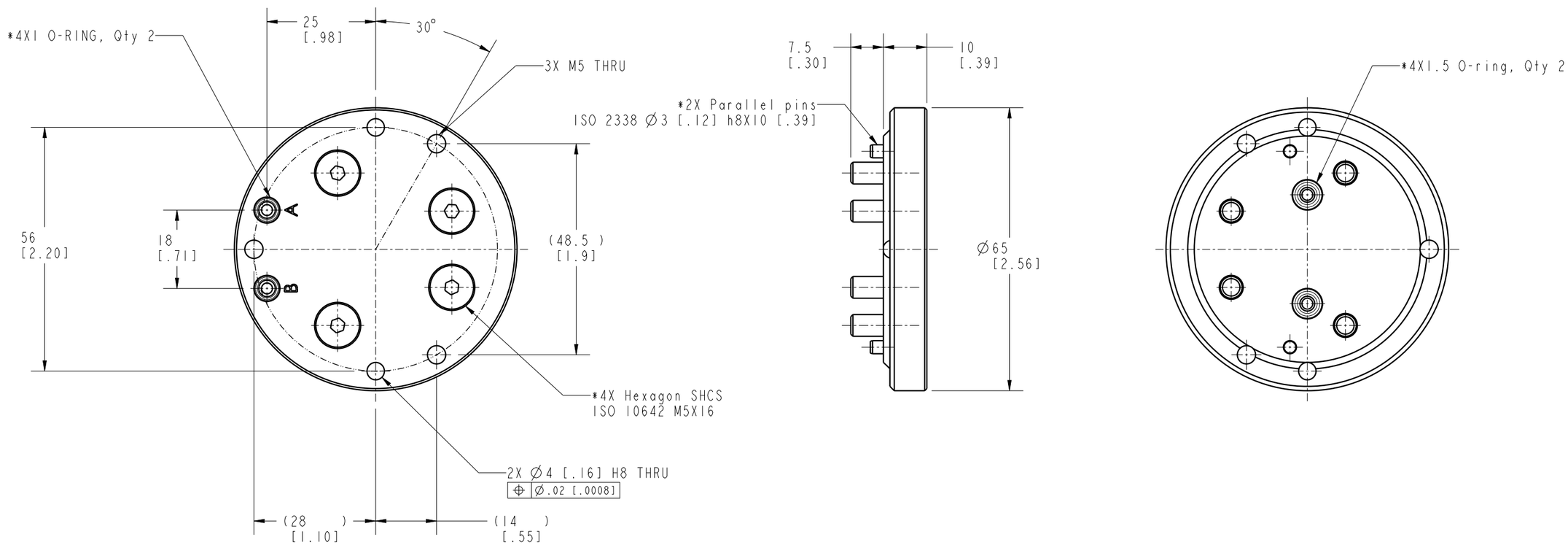

NOTES:
1. *Items are included

CAD CONTROL DRAWING

VEKTEK®
VEKTEK, INC.
1334 E. SIXTH AVE. P.O. BOX 625
EMPORIA, KS. 66801 U.S.A.

A	5752	RELEASE	ALS	10/22/25	VAP61026002	A	IMPAQT, TC, SCHUNK PZN 64
REV	IN ACCORDANCE WITH ECN	EFFECTIVE DATE	REVISED BY	DATE	REFERENCE MODEL	REF REV	
DRW BY: ALS	DRAWING STATUS: Released				TOLERENCES DO NOT APPLY	UNITS	SIZE
DATE: 7/7/25	PRODUCTION APPROVED FOR RELEASED STATUS ONLY				DIMENSIONS ARE NOMINAL	mm [inch]	B

ILCMVAP61026002 REV A

SHEET 1 OF 1

FORM FEG036, Rev. C

@Copyright 1986-2026 by Vektek LLC******* *****

****