LUBRICATE ALL SEALS WITH CLEAN HYDRAULIC OIL PRIOR TO ASSEMBLY.
DO NOT USE SILICONE BASED LUBRICANTS.

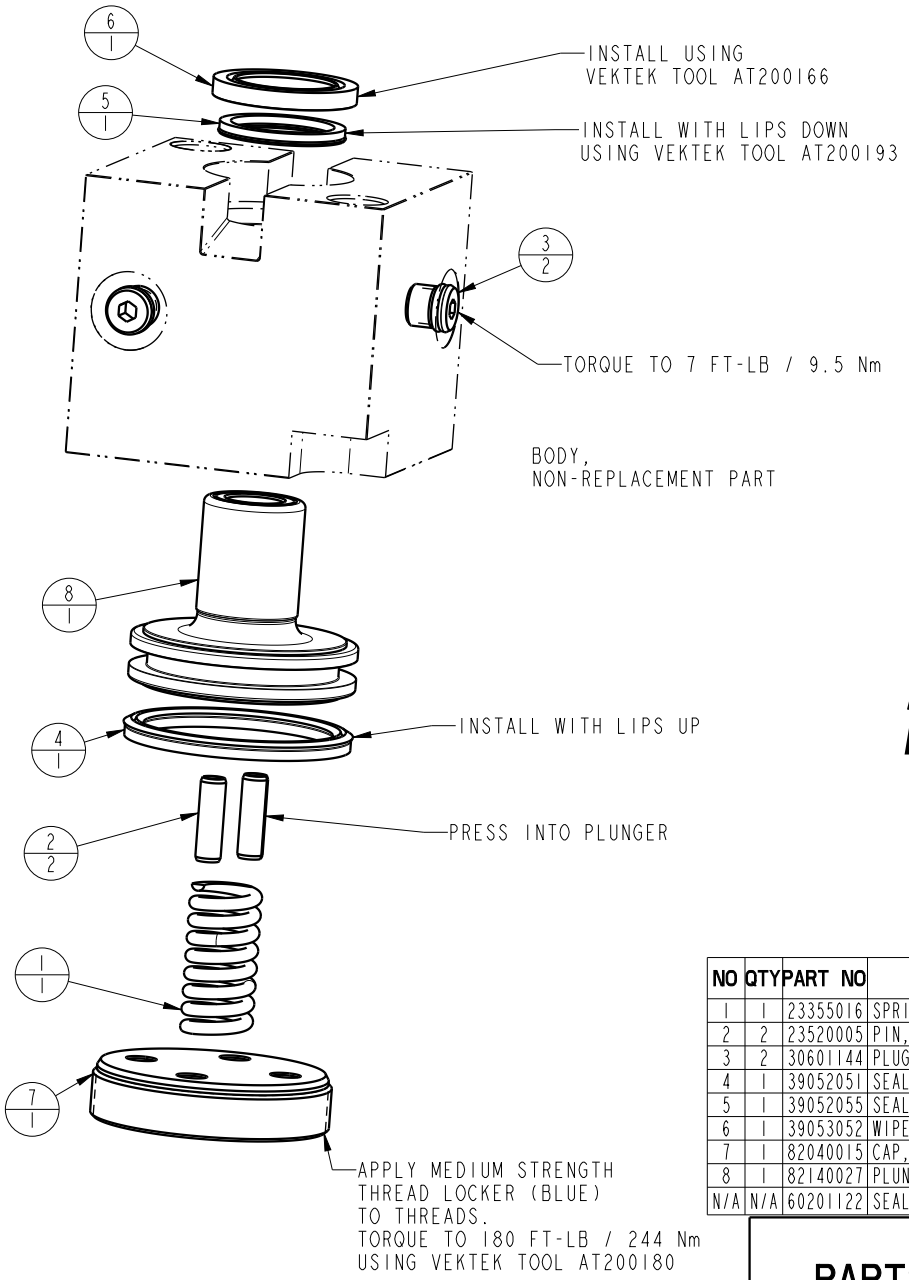

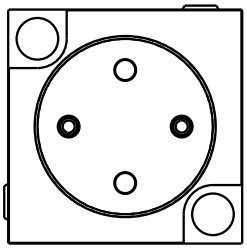

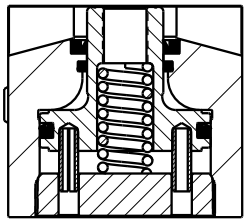

SECTION A-A
SCALE 0.375

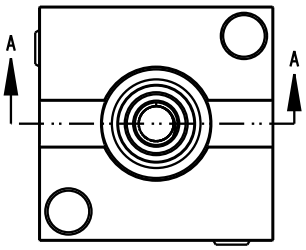

NO	QTY	PART NO	DESCRIPTION	STD SEAL KIT
1	1	23355016	SPRING, COMPRESSION	
2	2	23520005	PIN,SPRING,SLOTTED,1/4 X 7/8,SST	
3	2	30601144	PLUG, SOCH, SAE 4	
4	1	39052051	SEAL, U-CUP, 2 X 3/16 X 2 3/8	X
5	1	39052055	SEAL, LL, (1-1/16 X 1/8 X 1/8 X 1-5/16)	X
6	1	39053052	WIPER, PRESS-IN, (1-1/16)	X
7	1	82040015	CAP,CYL,BB,PULL,17100LB	
8	1	82140027	PLUNGER,CYL,CM,PULL,76.1kN	
N/A	N/A	60201122	SEAL KIT	NOTED

PARTS LIST

VEKTEK®

VEKTEK, INC.
1334 E. SIXTH AVE. P.O. BOX 625
EMPORIA, KS. 66801 U.S.A.

A	3658	RELEASE	JDW	11/19/18
REV	IN ACCORDANCE WITH ECN	EFFECTIVE DATE	REVISED BY	DATE

ASSEMBLIES AFFECTED
42-1251-00

PARTS LIST,ASSY,CYL,BB,PULL,76.1kN,8.0 STRK,M16x2.0

DRW BY: JDW
DATE: 11/19/18

DRAWING STATUS: **Released**
PRODUCTION APPROVED FOR RELEASED STATUS ONLY

SIZE A | MPLV2197 | REV A

SHEET 1 OF 1

FORM FEG035_PL_ASIZE, REV. B

@ Copyright 1986-2026 by Vektek LLC*** ***See Vektek.com>Resources>Literature>Special Maintenance & Production Tools