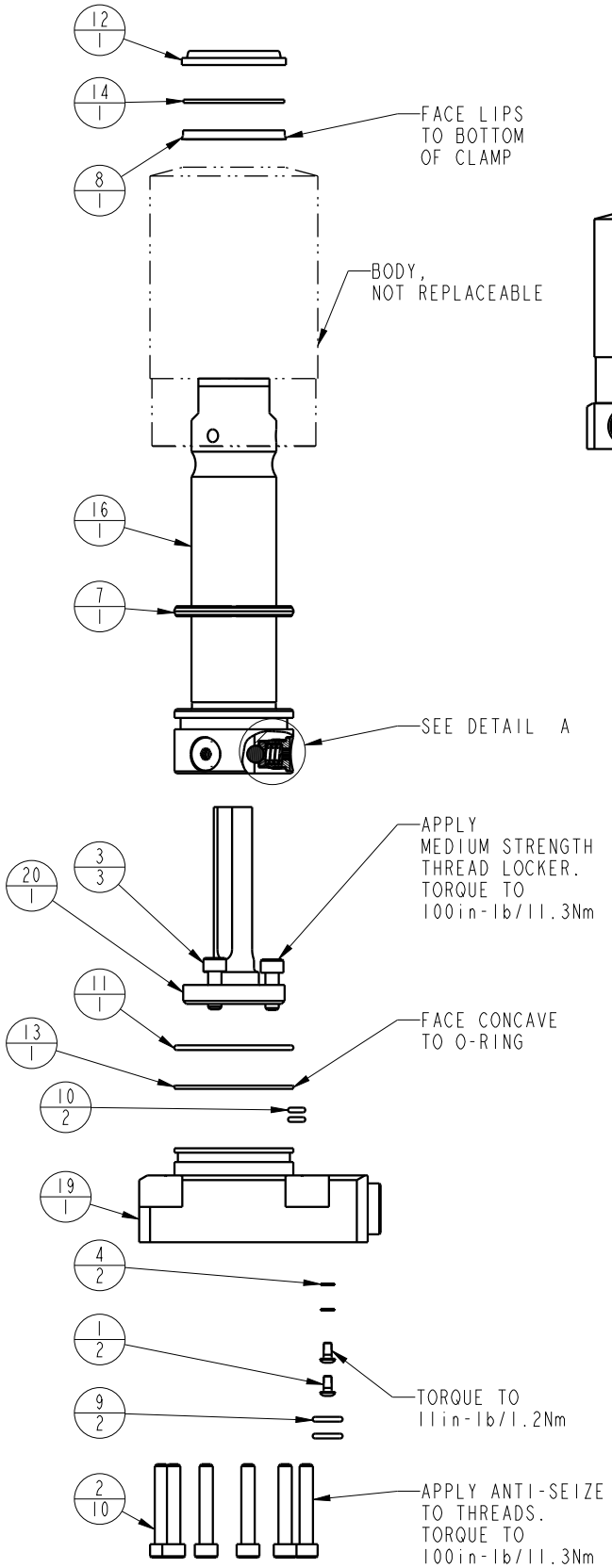

APPLY LUBRICANT TO ALL SEALS
PRIOR TO INSTALLATION.
DO NOT USE SILICONE TYPE LUBRICANTS.
FOR PROPER ARM MOUNTING SEE IS1505.

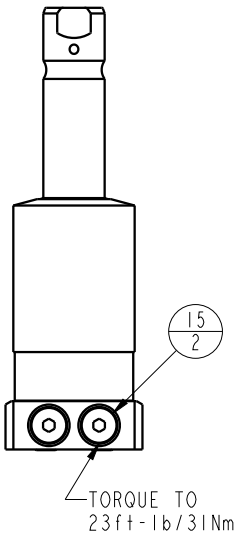

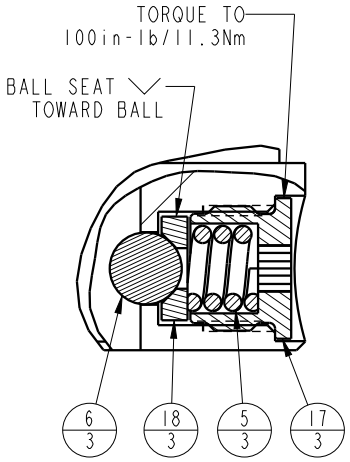

DETAIL A
SCALE 1.500

No.	QTY	PART No.	DESCRIPTION	Std. Seal Kit	FKM Seal Kit
N/A	N/A	IS1505	INSTRUCTION SHEET, ARM INSTALLATION		
N/A	N/A	6V711042	SEAL KIT, FKM		
N/A	N/A	60711042	SEAL KIT, STANDARD		
20	1	81591829	CAM,SC,LP,5000/22KN,STR,LS,TC		
19	1	81541807	BASE, SC, BF, LP, 22kN		
18	3	81532108	SEAT, BALL, SC, LP, TC		
17	3	81532107	RETAINER, SC, LP, TC		
16	1	81511812	PLUNGER,SC,LP,22KN,DA,LS,TC		
15	2	43068006	PLUG, 1/4 BSPP MALE		
14	1	39054008	BU RING,(-218)	X	X
13	1	39054007	BU RING,(-030)	X	39054021
12	1	39053005	WIPER,SNAP-IN, (1-1/4)	X	X
11	1	39051042	O-RING, (-030)	X	39V01021
10	2	39051041	O-RING, (-006)	X	39V51041
9	2	39050042	O-RING, (-011)	X	39051025
8	1	39011060	SEAL,BEVEL W/HEEL INSERT,1-1/4 x1/8 x1-1/2	X	39052015
7	1	39011056	SEAL,CROWN,1-9/16x1-3/4x5/32		
6	3	23650004	BALL,TUNGSTEN-CARBIDE.250		
5	3	23350066	SPRING, COMPRESSION		
4	2	21500200	WASHER		
3	3	21500031	SHCS, M5 x 0,8 x 14, ALY		
2	10	21500023	SHCS, M5 X .8-6G X 30MM		
1	2	21500019	SCREW, CAP, BTNH, M3 X 6, ALY		

PARTS LIST

VEKTEK®
VEKTEK, INC.
1334 E. SIXTH AVE. P.O. BOX 625
EMPORIA, KS. 66801 U.S.A.

REV				
A	3677	RELEASE	JDW	03/04/19
REV	IN ACCORDANCE WITH ECN	EFFECTIVE DATE	REVISED BY	DATE

DRW BY: JDW
DATE: 03/04/19

DRAWING STATUS: **Released**
PRODUCTION APPROVED FOR RELEASED STATUS ONLY

ASSEMBLIES AFFECTED
41422228
41422228F

PARTS LIST,ASSY,SC,LP,TC,BF,22KN,DA,STR,LS

SIZE A | MPLV7253 | REV A

SHEET 1 OF 1

FORM FEG035_PL_ASIZE, REV. B

@ Copyright 1986-2026 by Vektek LLC*** ***See Vektek.com>Resources>Literature>Special Maintenance & Production Tools

READ ALL INSTRUCTIONS BEFORE INSTALLING ARMS
FAILURE TO FOLLOW INSTALLATION INSTRUCTIONS WILL VOID PRODUCT WARRANTY !

–Installing or Positioning of Low Profile Swing Clamp Arms–

NOTE: If the arm is already installed on the plunger, loosen the cap screw.

CAUTION: Never attempt to rotate the arm before loosening the cap screw. This can damage the plunger rotating mechanism.

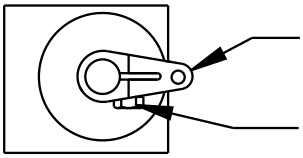

1. Rotate the arm to the desired radial position.
2. Tighten to the torque specification listed below.

MODEL	TORQUE ft-lb	TORQUE N-m
5000lb & 22Kn	115 ft-lb	156 N-m
7500lb & 33Kn	225 ft-lb	305 N-m

IT IS RECOMMEND THE CROSS BOLT BE REPLACED IF THE ARM NEEDS REMOVED AFTER IT HAS BEEN IN SERVICE.			
CROSS BOLT 5000 & 22KN SHORT LONG DOUBLE	CROSS BOLT 5000 & 22KN UPREACH	CROSS BOLT 7500 & 33KN SHORT LONG DOUBLE	CROSS BOLT 7500 & 33KN UPREACH
21-5000-24	21-5000-25	21-5000-28	21-5000-25

Instruction Sheet

VEKTEK®

VEKTEK, INC.
1334 E. SIXTH AVE. P.O. BOX 625
EMPORIA, KS. 66801 U.S.A.

REV	IN ACCORDANCE WITH ECN	EFFECTIVE DATE	REVISED BY	DATE
C	2799	RELEASE	JDW	01/29/15

DRW BY: MES
DATE: 08/01/05
DRAWING STATUS: **Released**
PRODUCTION APPROVED FOR RELEASED STATUS ONLY

Arm Installation Instruction Sheet
Low Profile Swing Clamps
SIZE A | IS1505 | REV C

SHEET 1 OF 1

FORM FEG041_IS_ASIZE, REV. B

@ Copyright 1986-2026 by Vektek LLC*** ***See Vektek.com>Resources>Literature>Special Maintenance & Production Tools