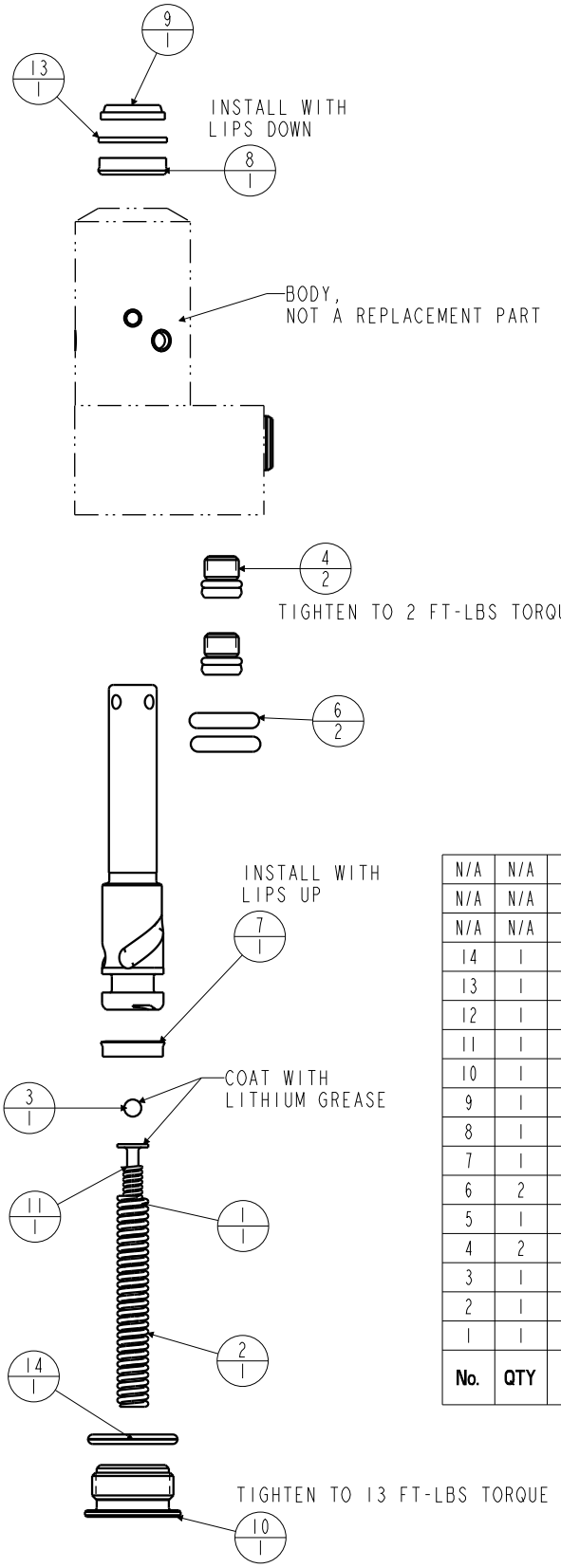

LUBRICATE ALL SEALS WITH CLEAN
HYDRAULIC OIL PRIOR TO ASSEMBLY.
DO NOT USE SILICONE BASED LUBRICANTS.

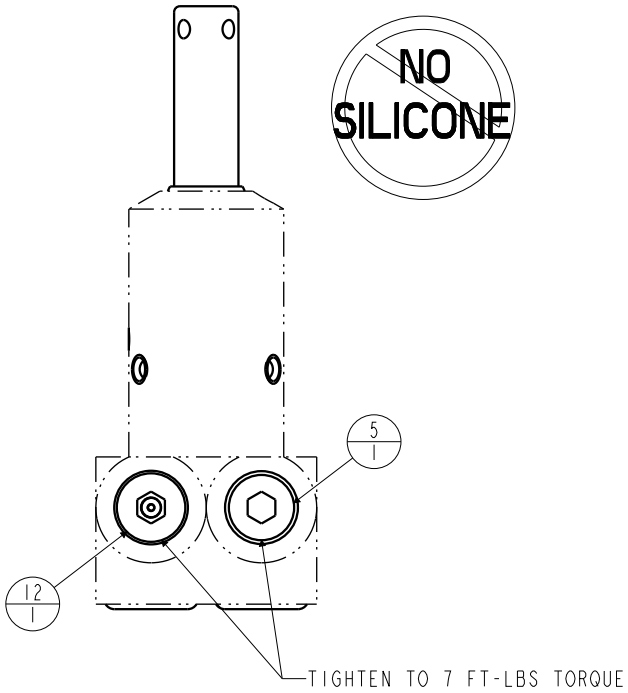

No.	QTY	PART No.	DESCRIPTION	Standard Seal Kit	FKM Seal Kit	Spring Kit
N/A	N/A	61250002	KIT, SPRING	N/A	N/A	NOTED
N/A	N/A	6V252105	KIT, SEAL, FKM	N/A	NOTED	N/A
N/A	N/A	60252105	KIT, SEAL, STANDARD	NOTED	N/A	N/A
14	1	39V00036	O-RING, (-908)	X	X	
13	1	39F54000	BU RING,(-111)	X	X	
12	1	92090001	ASSY, BREATHER, SAE #4			
11	1	81590501	ROD, SUPPORT, SPRING, SC, 450			
10	1	81400028	RETAINER,SC,HS,450			
9	1	39053004	WIPER,SNAP-IN, (7/16)	X	X	
8	1	39010038	SEAL, BEVEL, 7/16 x 3/32 x 5/8	X	39052014	
7	1	39010036	SEAL, BEVEL, 3/8 x 3/32 x 9/16	X	39052010	
6	2	39000050	O-RING, (-204)	X	39051022	
5	1	30601144	PLUG, SOCH, SAE 4			
4	2	30601122	PLUG, SOCH, SAE 2			
3	1	23600014	BALL, STEEL, ALLOY, .156	X	X	X
2	1	23311017	SPRING, COMPRESSION			X
1	1	23310008	SPRING, COMPRESSION			X

PARTS LIST

VEKTEK®
VEKTEK, INC.
1334 E. SIXTH AVE. P.O. BOX 625
EMPORIA, KS. 66801 U.S.A.

A	4574	RELEASE	RLK	12/22/21
REV	IN ACCORDANCE WITH ECN	EFFECTIVE DATE	REVISED BY	DATE

DRW BY: RLK
DATE: 12/22/21

DRAWING STATUS: Released
PRODUCTION APPROVED FOR RELEASED STATUS ONLY

ASSEMBLIES AFFECTED
25210502
25210502F

PARTS LIST, ASSY,CYL,PULL,TB,470

SIZE A | PL2525 | REV A

SHEET 1 OF 1

FORM FEG035_PL_ASIZE, REV. B

@ Copyright 1986-2026 by Vektek LLC*** ***See Vektek.com>Resources>Literature>Special Maintenance & Production Tools