LUBRICATE ALL SEALS WITH CLEAN HYDRAULIC FLUID PRIOR TO ASSEMBLY.

DO NOT USE SILICONE BASED LUBRICANTS.

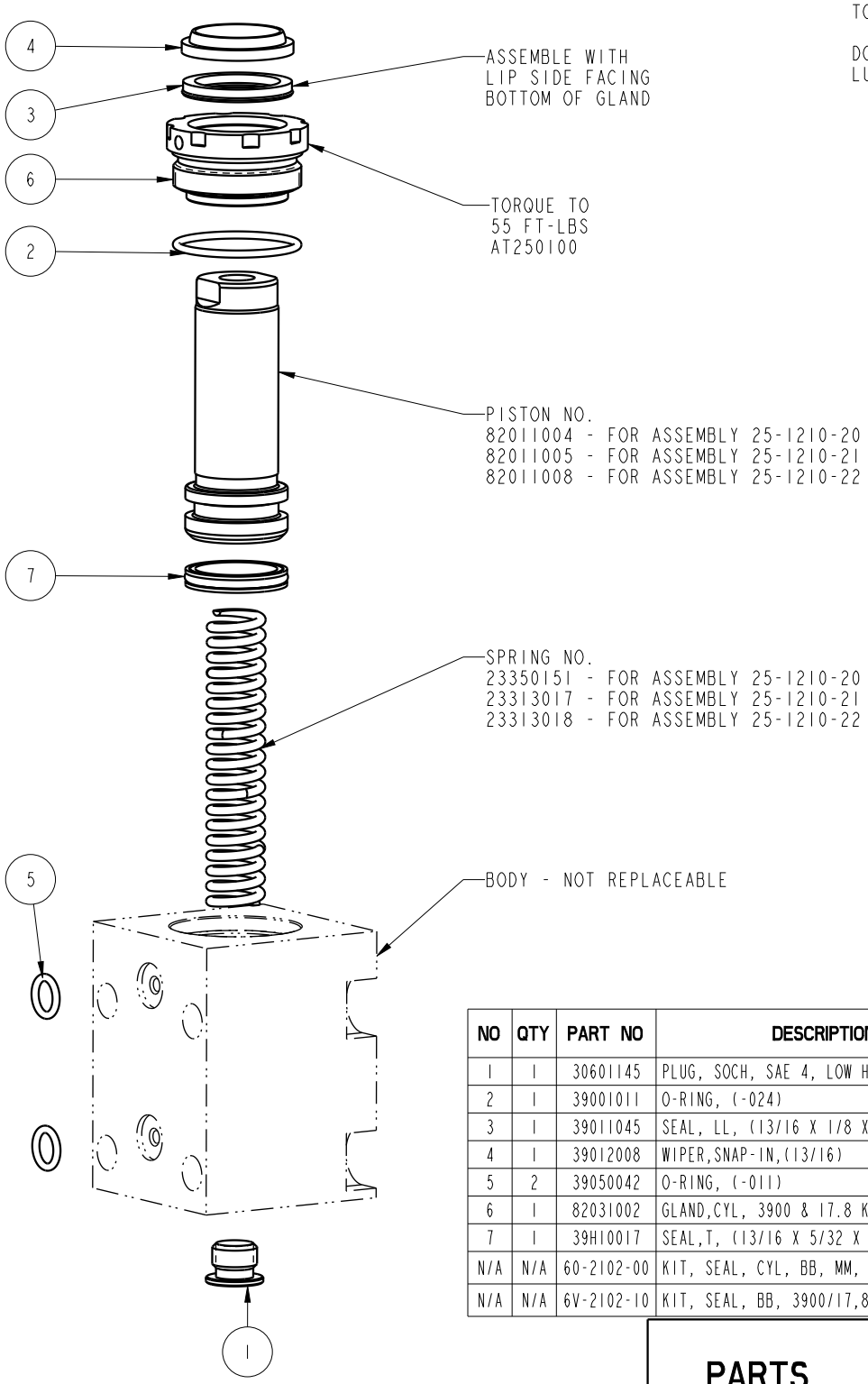

NO	QTY	PART NO	DESCRIPTION	STD SEAL KIT	FKM SEAL KIT
1	1	30601145	PLUG, SOCH, SAE 4, LOW HEAD		
2	1	39001011	O-RING, (-024)	X	39012012
3	1	39011045	SEAL, LL, (13/16 X 1/8 X 1/8 X 1-1/16)	X	39012005
4	1	39012008	WIPER,SNAP-IN,(13/16)	X	39012008
5	2	39050042	O-RING, (-011)	X	39051025
6	1	82031002	GLAND,CYL, 3900 & 17.8 KN		
7	1	39H10017	SEAL,T, (13/16 X 5/32 X 1)	X	39V10017
N/A	N/A	60-2102-00	KIT, SEAL, CYL, BB, MM, DA, 3900	NOTED	N/A
N/A	N/A	6V-2102-10	KIT, SEAL, BB, 3900/17,8 KN, DA, FKM	N/A	NOTED

PARTS LIST

VEKTEK®

VEKTEK, INC.
1334 E. SIXTH AVE. P.O. BOX 625
EMPORIA, KS. 66801 U.S.A.

A	5974	RELEASE	NPETERS	5/4/26
REV	IN ACCORDANCE WITH ECN	EFFECTIVE DATE	REVISED BY	DATE

DRW BY: NPETERS
DATE: 4/20/26

DRAWING STATUS: Released
PRODUCTION APPROVED FOR RELEASED STATUS ONLY

ASSEMBLIES AFFECTED
25-1210-20
25-1210-21
25-1210-22

PARTS LIST, ASSY, DAPC, MM, 3900

SIZE A | PL2537 | REV A

SHEET 1 OF 1

FORM FEG035_PL_ASIZE, REV. B

@ Copyright 1986-2026 by Vektek LLC*** ***See Vektek.com>Resources>Literature>Special Maintenance & Production Tools